ALPHA MICROSYSTEMS
RIGHT. FROM THE START

AM-3001

Expansion Subsystem Installation Instructions

© 1995 Alpha Microsystems

REVISIONS INCORPORATED	
REVISION	DATE
00	Aug. 1991
01	Apr. 1993

AM-3001 Expansion Subsystem Installation Instructions
To re-order this document, request part number PDI-03001-00.

The information contained in this manual is believed to be accurate and reliable. However, no responsibility for the accuracy, completeness or use of this information is assumed by Alpha Microsystems.

This document may contain references to products covered under U.S. Patent Number 4,530,048.

The following are registered trademarks of Alpha Microsystems, Santa Ana, CA 92799:

AMIGOS	AMOS	Alpha Micro	AlphaACCOUNTING
AlphaBASIC	AlphaCALC	AlphaCOBOL	AlphaFORTRAN 77
AlphaLAN	AlphaLEDGER	AlphaMAIL	AlphaMATE
AlphaNET	AlphaPASCAL	AlphaRJE	AlphaWRITE
CASELODE	OmniBASIC	VER-A-TEL	VIDEOTRAX

The following are trademarks of Alpha Microsystems, Santa Ana, CA 92799:

AlphaBASIC PLUS	AlphaVUE	AM-PC	AMTEC
DART	ESP	MULTI	inSight/am
inFront/am			

All other copyrights and trademarks are the property of their respective holders.

ALPHA MICROSYSTEMS
2722 S. Fairview Street
P.O. Box 25059
Santa Ana, CA 92799

TABLE OF CONTENTS

1.0 PRODUCT DESCRIPTION 1

2.0 PRODUCT DESCRIPTION 1

3.0 INSTALLATION PRECAUTIONS 3

4.0 INSTALLATION OVERVIEW 3
- 4.1 Removing the Side Panel 4

5.0 INSTALLING PERIPHERAL DEVICES 5
- 5.1 Peripheral Mounting Brackets 7
- 5.2 AM-3001 3-1/2" Diskette Drive Installation 9
- 5.3 Power and Interface Cables (SCSI Peripherals) 10
- 5.4 Optional Diskette Drive Cable Mounting Kit 10

6.0 INSTALLING I/O BOARDS AND CABLING 14
- 6.1 AM-349 Board 14
- 6.2 Installing Serial I/O Boards 15
- 6.3 AM-3001 to AM-3000M External Cabling 19

7.0 SOFTWARE CONSIDERATIONS 19

APPENDIX A - TERMINATORS AND TERMINATION POWER
- A.1 SCSI TERMINATION USING EXTERNAL TERMINATOR OPTION . A-1
  - A.1.1 Termination Procedure (Without External Terminator) A-3
- A.2 TERMINATOR POWER A-3

1.0 PRODUCT DESCRIPTION

This document describes the installation of both I/O and peripheral devices into the AM-3001 expansion subsystem. The AM-3001 is designed to be used in conjunction with Alpha Micro's AM-3000M computer.

These instructions are written for the experienced Alpha Micro Technician, so if you do not feel comfortable performing the hardware procedures discussed below, please contact your Alpha Micro Dealer or the Alpha Micro Technical Support Group for help.

The AM-3001 subsystem is designed for several different types of peripheral and I/O devices; these devices can be one or more of the following:

- 1/4" streaming tape drives.
- 8mm magnetic tape drives.
- 3-1/2" SCSI hard disk drives (using 5-1/4" mounting brackets).
- Both full-high and half-high SCSI 5 1/4" hard disk drives.
- 5-1/4" half-high diskette drives.
- 3-1/2" diskette drives (using 5-1/4" mounting brackets).
- AM-358 (eight port) serial I/O boards.
- AM-355 (six port) serial I/O boards.

Installing peripheral and I/O devices in the AM-3001 subsystem is simply a matter of mounting the devices inside the enclosure, and connecting the appropriate power and interface cables. Once installed, you will need to reference the installation guide for each of the individual devices for instructions on how to identify the new device on your system.

2.0 PRODUCT DESCRIPTION

The AM-3001 subsystem looks like your AM-3000M computer. The dimensions, type of power supply, and method of installing serial I/O boards and peripheral devices is exactly the same as the AM-3000M computer.

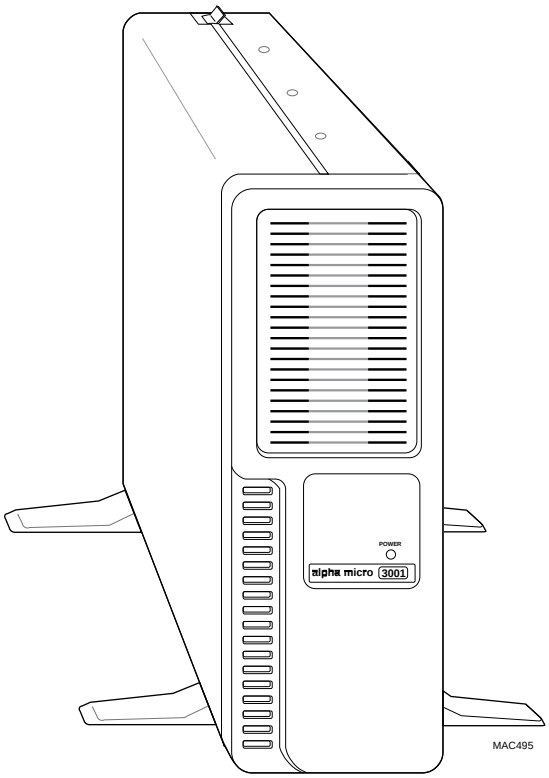

Figure 1—AM-3001 Subsystem

The front panel on the AM-3001 subsystem does not have (or require) a reset button or a digital display. The front panel does have a "power on" status light, which remains lit whenever the power is on.

The AM-3001 subsystem is designed to support up to two 5-1/4" SCSI peripheral devices and one diskette drive. For example, you could install a SCSI 5-1/4" half-high streaming tape drive (AM-625), a diskette drive, and one additional half or full-high 5-1/4" SCSI hard disk drive.

The AM-3001 front bezel can be ordered with either no cutout, a half-high 5-1/4" cutout, or a full-high 5-1/4" cutout. The cutout is designed for peripherals that use removable media, like diskette and magnetic tape drives.

The AM-3000M SCSI bus supports four unique addresses. The number of SCSI devices you can install in the AM-3001 subsystem depends on the number of SCSI devices you currently have installed in your AM-3000M computer. For example, if you have two SCSI peripherals already installed in your AM-3000M computer, then only two SCSI devices could be installed in the AM-3001 subsystem.

The I/O expansion on the AM-3001 subsystem is the same as your AM-3000M computer. The rear panel will support a maximum of 32 serial ports (four AM-358 boards). You can also mix AM-358 and AM-355 I/O boards. Other I/O boards designed to work on the paddle card I/O bus (AM-362, AM-324, ,etc...) should be installed in your AM-3000M host computer.

3.0 INSTALLATION PRECAUTIONS

To avoid damaging static sensitive electronic components, make sure you are properly grounded and using a work area suitable for working on electronic equipment. Although it doesn't seem like much, that tiny bolt of static electricity discharged through your finger tips has the power to degrade or ruin electronic components.

Termination:

The SCSI peripheral in the AM-3001 subsystem attached to the connector located farthest down the cable away from the SCSI bus connector on the host computer's CPU board **must have its terminator(s) installed.** All other SCSI devices in both the host computer and the subsystem should have their terminators removed.

See Appendix A at the end of this document which includes more detailed information about terminating SCSI peripherals and supplying termination power to the SCSI bus. This information includes the standard Alpha Micro termination procedure for SCSI peripherals used in AMOS based computers and subsystems.

The installation instructions shipped with each SCSI peripheral contains information on how to configure terminators and termination power jumpers.

Device Address

SCSI devices daisy chained to a common bus must be configured so that none of the devices share the same address.

Electronic Isolation:

When installing a SCSI disk drive, you will want to make sure the drive's head disk assembly (HDA) does not make contact with the mounting brackets. This will create a ground loop between AC and DC grounds, resulting in excessive data errors. The best way to test for this condition is to use an ohm meter to check for continuity between the drive and the chassis bottom.

4.0 INSTALLATION OVERVIEW

Your AM-3001 subsystem is assembled at the factory. Any peripheral devices you order with your AM-3001 will be installed and tested prior to shipment. However, once you start using your AM-3001 subsystem, you may decide to add extra peripheral devices or additional I/O boards. The instructions in the following sections describe the procedure for opening the subsystem, followed by information for installing I/O boards and peripheral devices (including magnetic tape, diskette, and hard disk drives.)

4.1 Removing the Side Panel

The following instructions explain how to remove the AM-3001 side panel:

1. The first step in removing the side panel is to lay the subsystem down on its side as indicated in Figure 2. Make sure you have a padded static-free work surface.

2. Figure 2 shows some of the screws that need to be removed in order to remove the subsystem's side panel.

3. Remove the screws holding the pedestal feet in place. In between the pedestal feet, there are two more side panel screws. Remove these two screws also.

4. Remove the three screws highlighted in Figure 2.

5. There is one final screw holding the side panel in place. This screw is located on the rear panel as shown in Figure 3.

6. After all the screws have been removed, slide off the side panel and put it in an area where it will not get damaged.

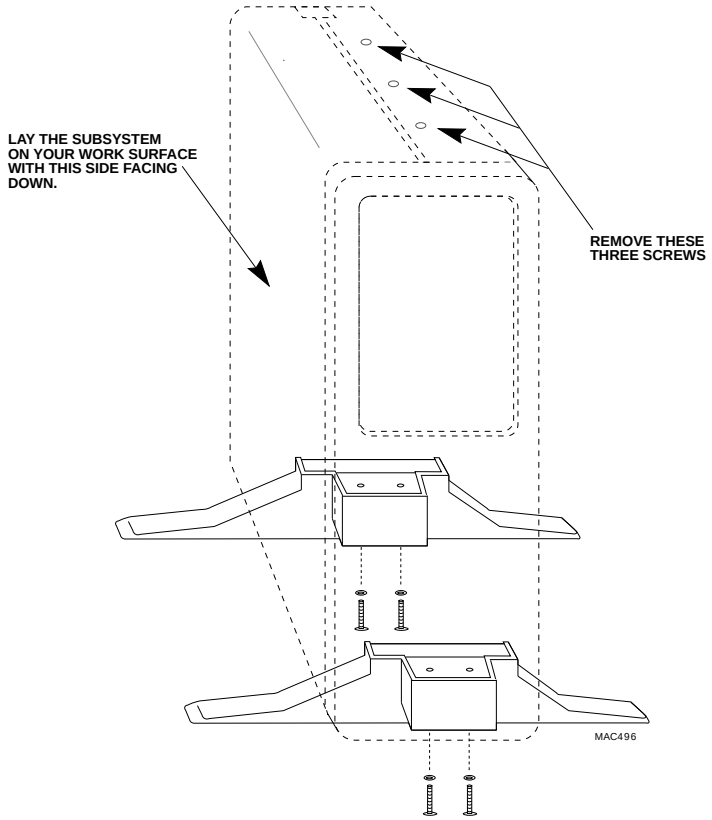

Figure 2

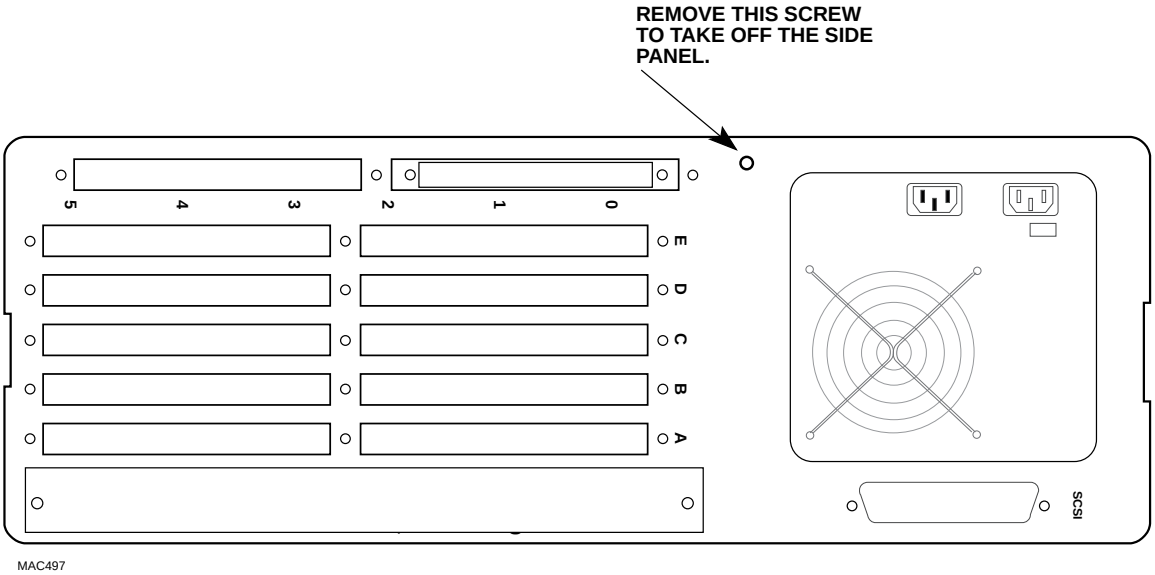

Figure 3

5.0 INSTALLING PERIPHERAL DEVICES

Figure 4 shows the key installation areas inside the AM-3001 enclosure. The peripheral mounting area, designated with the letters "A" and "B," is the primary focus of this section.

As mentioned earlier, there are enough interface and power cables in the AM-3001 to support two SCSI 5-1/4" peripherals and one diskette drive.

The interface cable to install a diskette drive is not included in the standard AM-3001 subsystem. However, a diskette drive installation kit is available for the AM-3001 which includes the interface cable and mounting hardware.

Because there is no cutout in the AM-3001 front bezel at position "A," this mounting location should only be used for SCSI hard disk drives. Mounting position "B" is designed for peripherals with removable media like diskette and magnetic tape drives.

Alpha Micro also sells 3-1/2" SCSI hard disk drives shipped with 5-1/4" mounting brackets that are AM-3001 compatible.

The AM-3001 front bezel can be ordered with either no cutout, a half-high 5-1/4" cutout, or a full-high 5-1/4" cutout.

The power supply has the necessary connectors to support four peripheral devices, plus two connectors to supply power to the AM-349 board. The two power connectors for the AM-349 board are factory installed and should never be disconnected. The power connectors that support peripheral devices are keyed to prevent incorrect insertion.

Not shown in Figure 4 is a factory installed 50-pin SCSI interface cable that can link up to two SCSI peripherals to an external connector located on the AM-3001 rear panel.

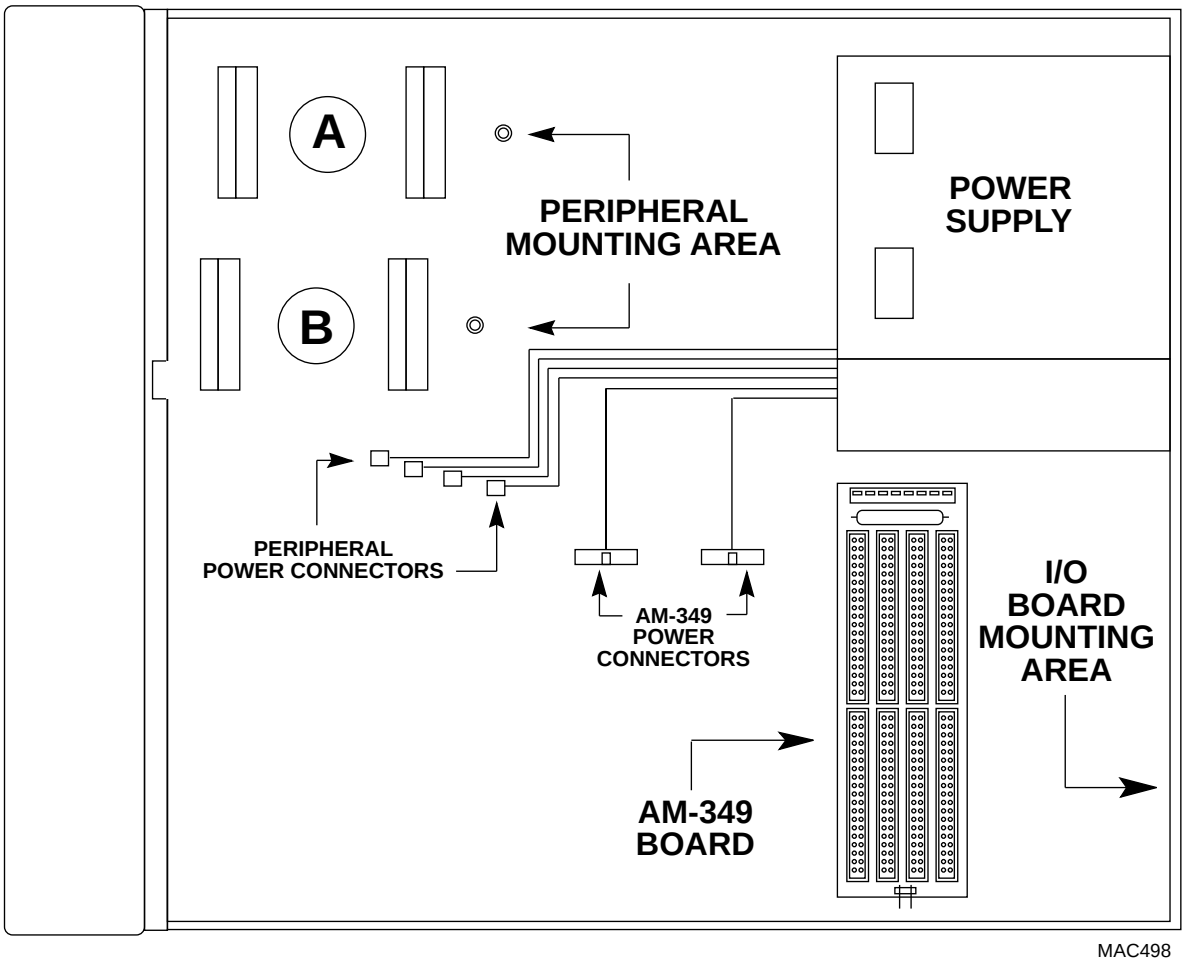

Figure 4—AM-3001 Internal Side View

5.1 Peripheral Mounting Brackets

Peripherals are installed in the chassis using a plastic mounting base and a metal support bracket. The basic assembly is shown in Figure 5. Make sure the diskette drive is installed so it will be in its proper operating position when the AM-3001 is sitting on its pedestal feet.

SCSI peripherals, like the AM-625 tape drive shown in Figure 5, should be positioned with pin-1 on the drive's 50-pin connector located closest to the plastic mounting base.

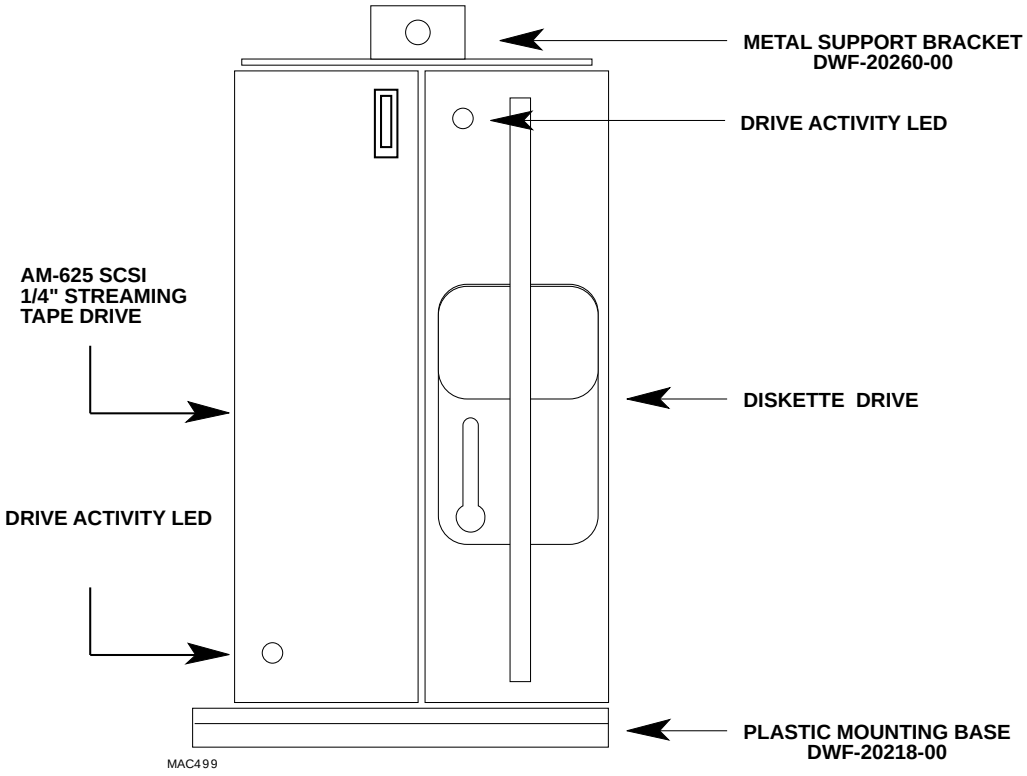

Figure 5—Diskette and AM-625 Streamer Drive Assembly

Figure 6 shows an illustration of the plastic mounting base; the screw holes used for mounting each type of peripheral device are highlighted. The screws used to attach peripheral devices to the mounting brackets are included in the product kit shipped with each device. The kit includes both metric and standard screws. Gently thread one of the screws into the drive to determine if you need standard or metric screws for your installation.

The drive(s) should be positioned on the mounting base with the device's front panel pointing in the direction indicated by the arrow in Figure 6.

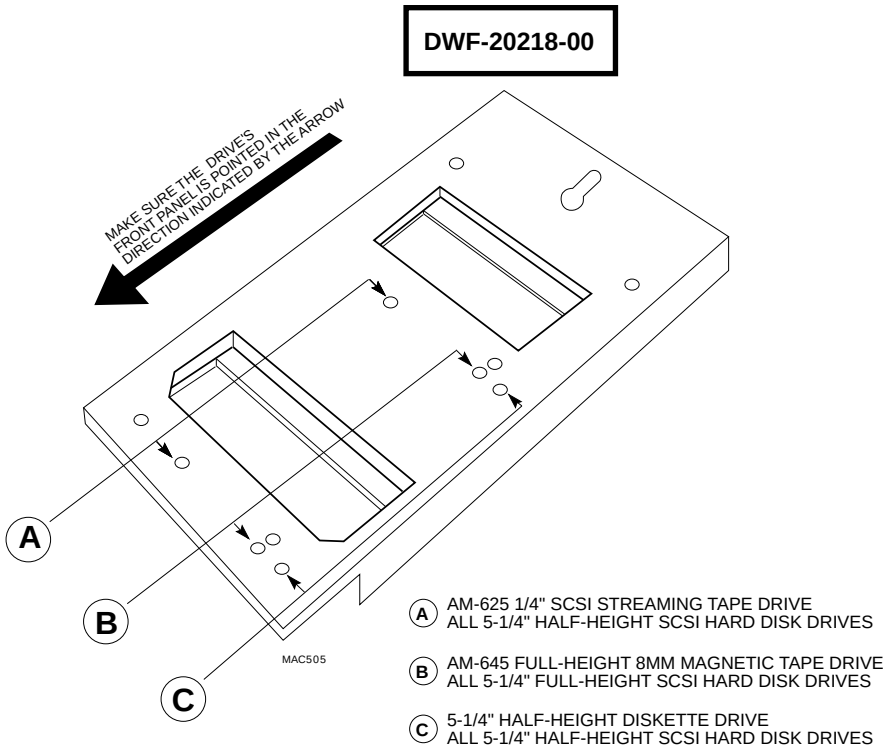

Figure 6—Plastic Mounting Base

There are several different types of metal support brackets similiar to the one shown in Figure 7. The type you receive depends on what type of peripheral you are installing. The particular bracket shown in Figure 7 is used for AM-625 streamer and diskette drive installations.

Install the metal support bracket as shown in Figure 5. The screw holes used to hold the bracket in place are shown in Figure 7.

The easiest way to install the metal support bracket is to first install the peripheral device on the plastic mounting base. Once the device is attached to the mounting base, place the assembly in the chassis in its correct mounting position. Now, set the metal support bracket in position on top of the peripheral, as shown in Figure 5. Install the screw securing the metal support bracket to the front bezel. The screw holes for attaching the metal support bracket to the drive should be perfectly aligned with the threaded screw holes in the drive, making it easy to install the screws.

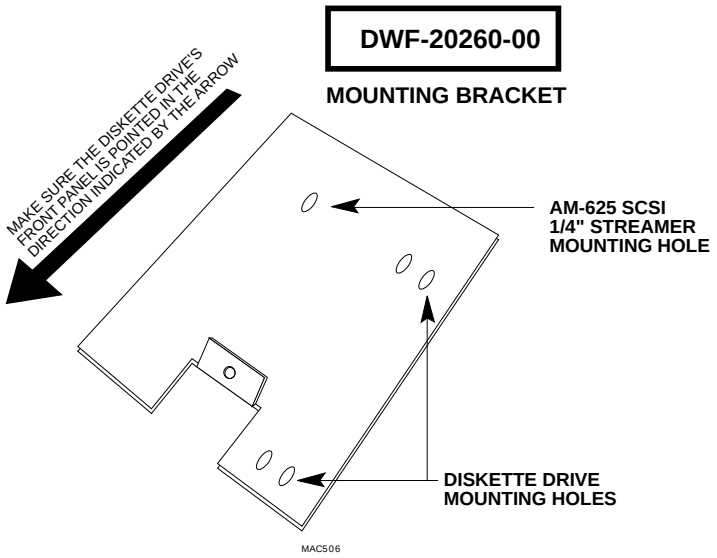

Figure 7—Metal Support Bracket

When properly positioned, the diskette and AM-625 streamer drives (shown in Figure 5) will fit perfectly through the cutout in your bezel at mounting location "B." See Figure 4.

SCSI hard disk drives will fit just behind the rear panel at mounting location "A." See Figure 4.

An AM-645 full-high 5-1/4" 8mm tape drive requires a front bezel with a full-high 5-1/4" cutout. This will allow the drive to be installed at mounting location "B."

The drive and mounting bracket assembly attaches to the AM-3001 with two screws. One screw connects the plastic mounting base to the chassis and the other screw secures the metal support bracket to the front bezel.

5.2 AM-3001 3-1/2" Diskette Drive Installation

The 3-1/2" diskette drive designed for the AM-3001 subsystem comes with a 3-1/2" to 5-1/4" mounting adapter kit. The kit includes a 5-1/4" mounting adapter bracket, a standard 4-pin DC power connector adapter, a board-edge connector adapter, and instructions on how to install the adapter hardware.

Once the drive is attached to the 5-1/4" mounting adapter, it installs in the AM-3001 subsystem in the same way as the standard 5-1/4" half-high diskette drive, with one exception. The drive must be electrically isolated from the chassis. This is accomplished by using the two nylon shoulder washers included in the mounting kit. Install the washers as shown in Figure 8.

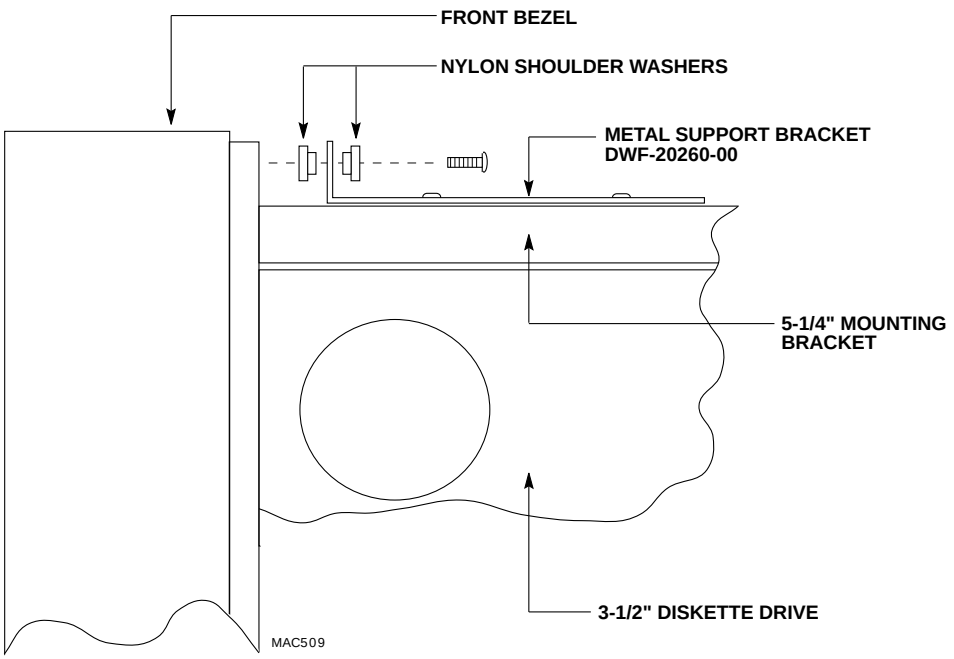

Figure 8

5.3 Power and Interface Cables (SCSI Peripherals)

There is a SCSI interface cable with two 50-pin connectors already installed in your chassis. Simply plug the 50-pin connector into the back of the SCSI drive, or drives if you are installing two drives. Make sure the red stripe on the cable aligns with pin-1 on the drive.

The chassis also has four standard four pin power connectors. Plug one of these power connectors into each drive. The power connectors are keyed, so you can't plug them in incorrectly.

Reinstall the top cover.

5.4 Optional Diskette Drive Cable Mounting Kit

The internal and external interface cables for installing a diskette drive are not part of the standard AM-3001 subsystem. The installation kit for a diskette drive must be ordered separately. The diskette drive installation kit includes:

1. Two rear panel brackets (one for the AM-3000M computer and one for the AM-3001 subsystem) with cutouts for both 34 and 60-pin connectors.

2. Two 34-pin connector receptacles, one for each of the rear panel brackets.

3. Two 34-pin interface cables; one cable connects the diskette drive to the rear panel of the AM-3001; the other 34-pin cable connects the AM-214 diskette drive controller to the rear panel of the AM-3000M computer.

The AM-214 board is not included in the diskette drive mounting kit, it must be ordered separately.

4. The mounting kit also includes the external 34-pin cable that connects between the rear panels of the AM-3000M computer and the AM-3001 subsystem.

The following instructions apply to both the AM-3001 subsystem and the AM-3000M computer:

1. The AM-3001 and the AM-3000M both come with a standard 60-pin rear panel I/O bracket that supports serial I/O expansion in the AM-3001 subsystem. The bracket, which contains a keyed 60-pin connector, is held in place with three screws as shown in Figure 9.

2. Remove the three screws holding the bracket to the rear panel. For now, leave the 60-pin connector and cable assembly attached to the bracket you just removed.

3. Position the new bracket as shown in the lower illustration in Figure 9. Make sure the diskette drive and serial I/O connector cutouts are oriented as shown in the illustration. Install the three screws that secure the bracket to the rear panel.

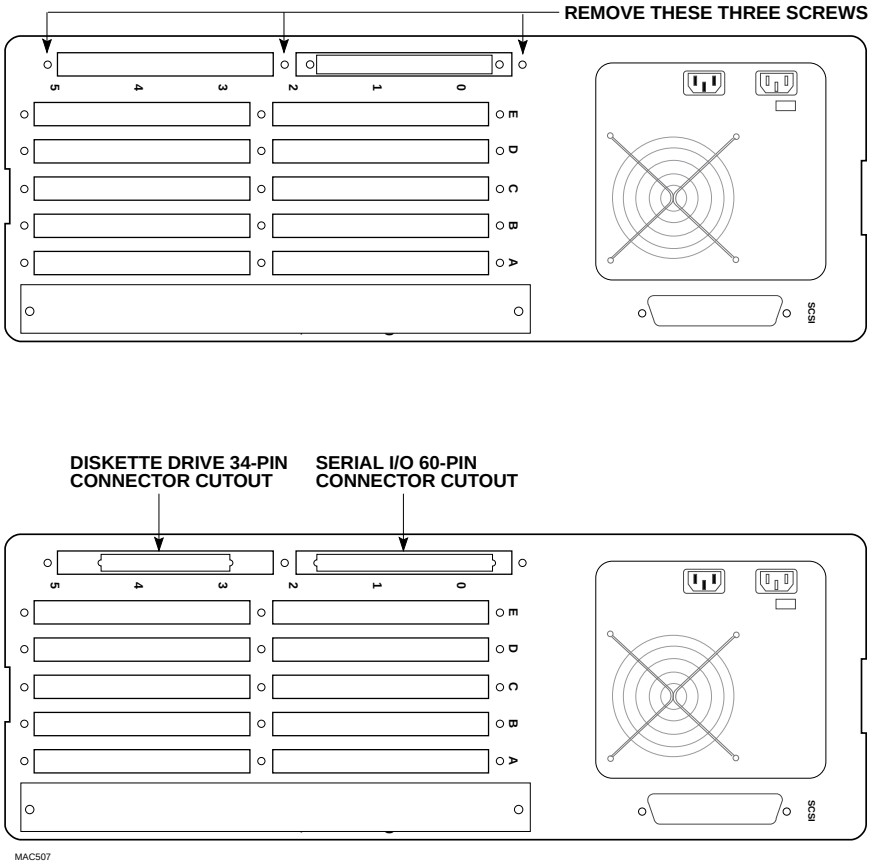

Figure 9

4. Notice how the 60-pin connector assembly is attached to the old rear panel bracket. You must install this assembly on the new bracket in exactly the same position. Remove the two screws holding the 60-pin cable and connector assembly to the old bracket. Install the assembly on the new bracket.

5. The next step is to install the cable and connector assembly that supports the diskette drive. The diskette drive connector and cable assembly is identical to the serial cable/connector assembly. The only difference is that the diskette drive connector is 34-pin, instead of 60-pin.

6. The cable assembly is two pieces, consisting of a 34-pin connector receptacle and a 34-pin flat ribbon cable and connector. There are two 34-pin flat cables in the mounting kit; the longer cable (DWB-10289-01) with the board-edge connector goes in the AM-3001 subsystem between the diskette drive and the rear panel; the shorter cable (DWB-10289-00) has a standard 34-pin connector that connects between the AM-214 board and the rear panel of the AM-3000M computer.

The assembly goes together as follows:

34-pin Rear Panel Cutout

34-pin Connector Receptacle

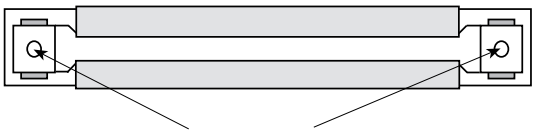

Screw into back side of 34-pin opening in I/O mounting bracket

34-pin I/O Cable

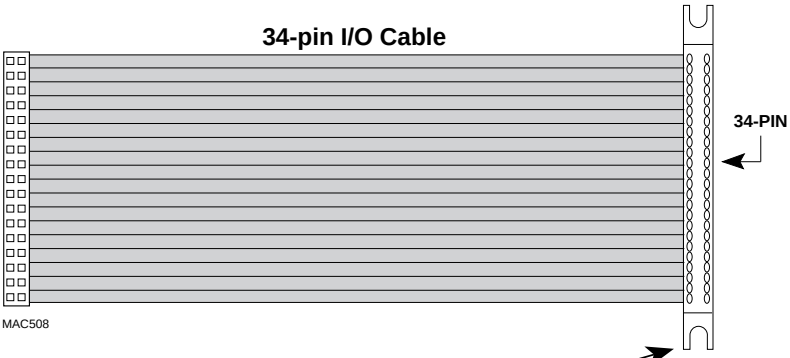

"Ears" screw into the back of the 34-pin Connector Receptacle

Figure 10—34-pin External I/O Connector Assembly

7. Screw the connector receptacle into the back of the I/O mounting bracket, so it is centered behind the opening in the bracket (the 34-pin side), and so the flat side of the receptacle is flush with the bracket opening.

8. Snap the male side of the I/O cable into the back of the receptacle so the "ears" overlap the screw holes. Secure the cable by screwing the ears onto the receptacle.

9. Attach the other end of the cable to the board-edge connector on the diskette drive. Make sure the red stripe on the cable aligns with pin-1 on the drive.

10. Now, repeat this same procedure on the AM-3000M computer. The only difference between the procedures is that the 34-pin cable connects to the AM-214 board instead of a diskette drive.

6.0 INSTALLING I/O BOARDS AND CABLING

The following sections describe how to install serial I/O boards into an AM-3001 subsystem. You can install AM-355 (six port) and (or) AM-358 (eight port) serial I/O boards. All other boards designed for the paddle card bus (AM-362, AM-324, etc...) should be installed in the AM-3000M host computer.

There are two special serial I/O software drivers designed for the AM-3001 subsystem; **AM355B.IDV** is the driver that supports AM-355 boards; **AM358B.IDV** is the driver that supports AM-358 boards.

6.1 AM-349 Board

The AM-349 board, shown in Figure 11, serves several purposes; it has internal and external 60-pin connectors for linking the serial I/O boards to the rear panel of the AM-3001 subsystem; it provides power to the serial I/O boards; and it has an on board load resistor to insure the power supply always has an adequate load.

The AM-349 is factory installed in the AM-3001 subsystem. The cabling that connects the AM-349's external 60-pin J3 connector to the rear panel and the connectors supplying power to the AM-349 board are also factory installed. The only connection you will have to make is plugging in the cable connecting the serial I/O boards to the internal J4 connector (See Figure 11).

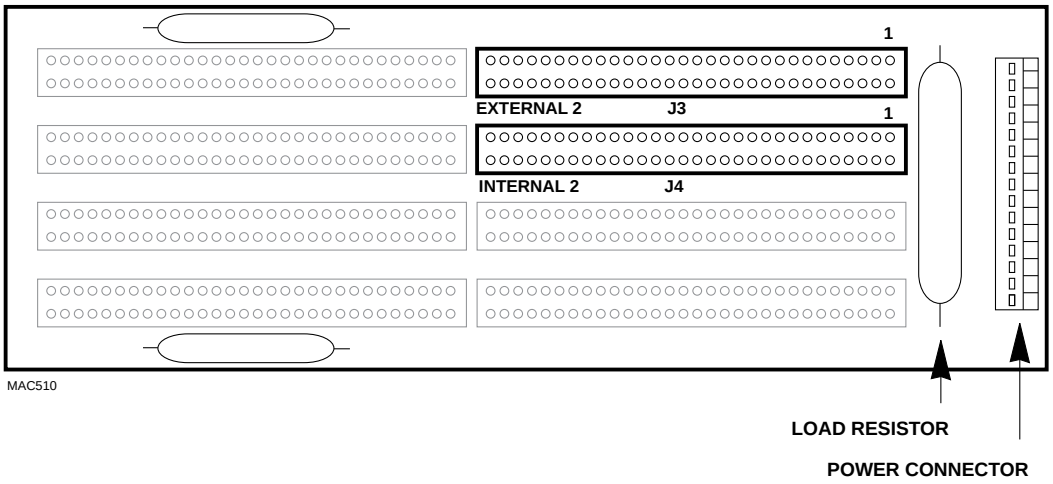

Figure 11

6.2 Installing Serial I/O Boards

AM-358 and AM-355 serial I/O boards have factory installed mounting brackets. The following instructions explain how to install serial I/O boards in the AM-3001 subsystem:

1. The serial boards attach directly to the rear panel and are held in place with three screws. To install a serial I/O board, you must first remove the filler panel covering the slot where you wish to install the board.

2. Figure 12 shows the screws used to hold both the filler panels and the serial I/O boards in place.

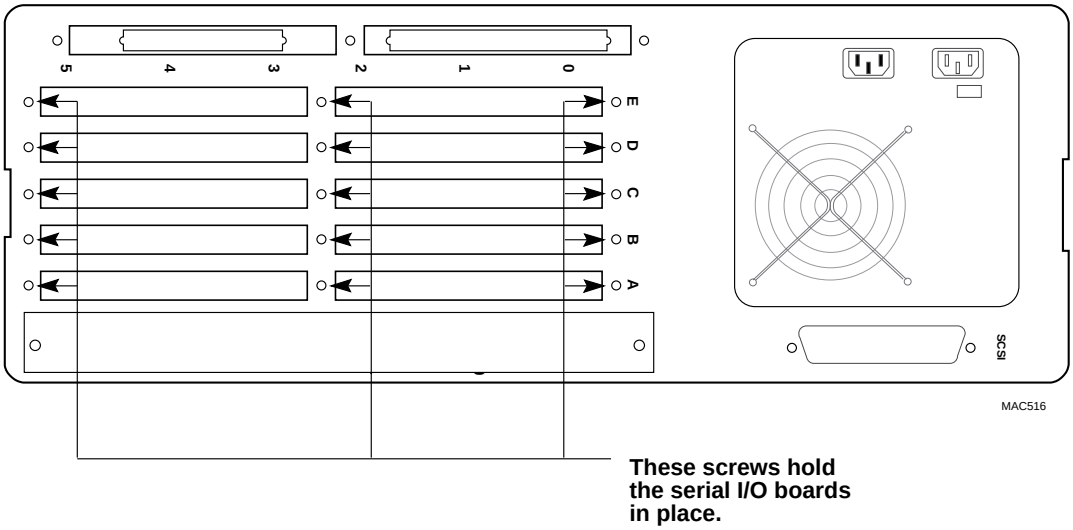

Figure 12

3. Figures 13 through 17 show every possible I/O combination supported by the AM-3001 subsystem. Address and install your serial I/O boards as shown in the illustrations.

4. The first board should be installed in the lowest or "1st BOARD" position as shown in the illustrations. Always install the AM-358 boards before installing your AM-355 boards.

5. Remove the terminators from all boards except the serial I/O board located farthest away from the "1st BOARD" position.

6. There is a 60-pin cable in your product installation kit that has six 60-pin connectors. Start by plugging the cable into the J4 connector on the AM-349 board. Make sure the red stripe on the cable aligns with pin-1 on the AM-349's J4 connector.

7. Connect the cable to each successive I/O board attached to the rear panel. Do not twist the cable, the red stripe on the cable must align with pin-1 on each of the I/O boards on the rear panel.

8. The product installation guide for AM-355 and AM-358 I/O boards contain additional information on termination and cabling.

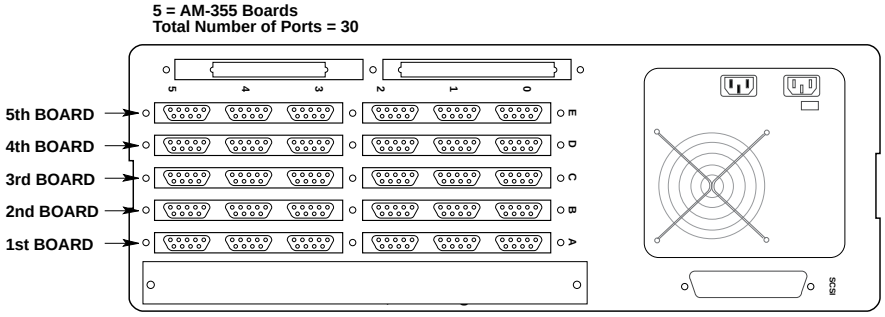

Board Number	Type of I/O Board	I/O Board IDV	Board I.D. Jumper Select	Octal Port Numbering
5th Board	AM-355	AM355B.IDV	12	30-35
4th Board	AM-355	AM355B.IDV	9	22-27
3rd Board	AM-355	AM355B.IDV	6	14-21
2nd Board	AM-355	AM355B.IDV	3	6-13
1st Board	AM-355	AM355B.IDV	0	0-5

MAC511

= JUMPER INSTALLED

Figure 13

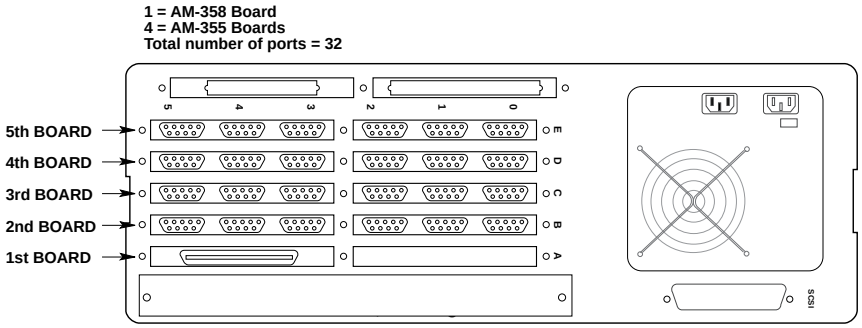

Board Number	Type of I/O Board	I/O Board IDV	Board I.D. Jumper Select	Octal Port Numbering
5th Board	AM-355	AM355B.IDV	13	32-37
4th Board	AM-355	AM355B.IDV	10	24-31
3rd Board	AM-355	AM355B.IDV	7	16-23
2nd Board	AM-355	AM355B.IDV	4	10-15
1st Board	AM-358	AM358B.IDV	0	0-7

MAC512

= JUMPER INSTALLED

Figure 14

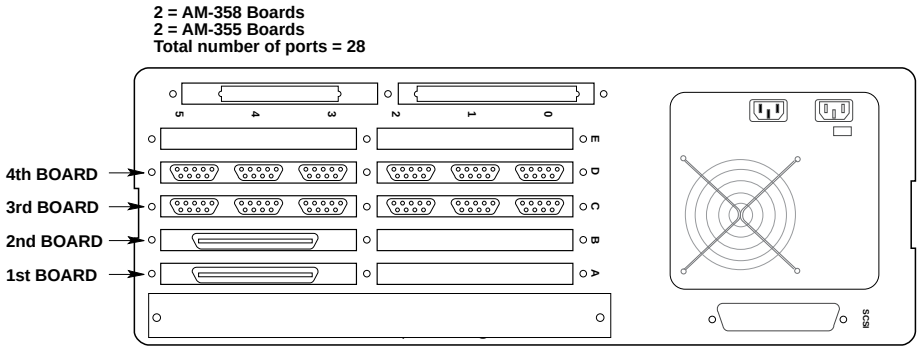

Board Number	Type of I/O Board	I/O Board IDV	Board I.D. Jumper Select	Octal Port Numbering
4th Board	AM-355	AM355B.IDV	11	26-33
3rd Board	AM-355	AM355B.IDV	8	20-25
2nd Board	AM-358	AM358B.IDV	4	10-17
1st Board	AM-358	AM358B.IDV	0	0-7

MAC513

= JUMPER INSTALLED

Figure 15

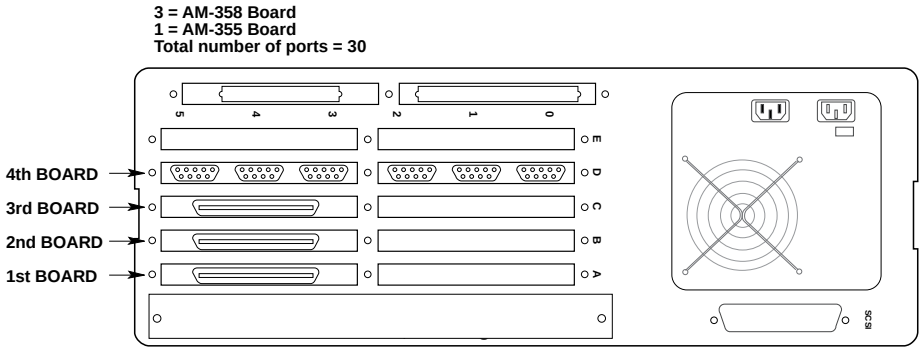

Board Number	Type of I/O Board	I/O Board IDV	Board I.D. Jumper Select	Octal Port Numbering
4th Board	AM-355	AM355B.IDV	12	30-35
3rd Board	AM-358	AM358B.IDV	8	20-27
2nd Board	AM-358	AM358B.IDV	4	10-17
1st Board	AM-358	AM358B.IDV	0	0-7

MAC514

= JUMPER INSTALLED

Figure 16

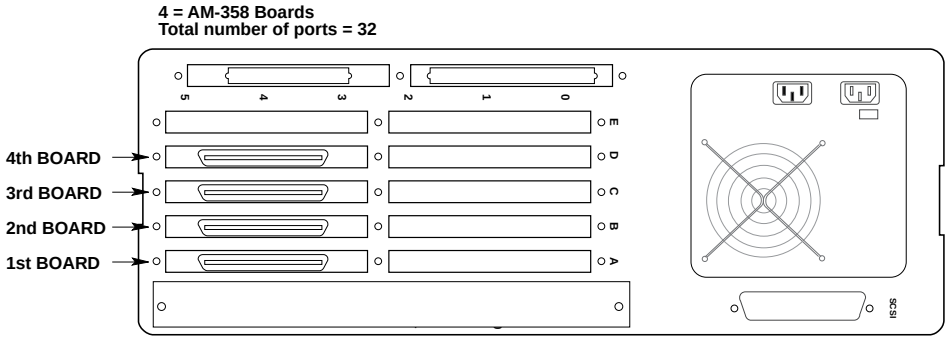

Board Number	Type of I/O Board	I/O Board IDV	Board I.D. Jumper Select	Octal Port Numbering
4th Board	AM-358	AM358B.IDV	12	30-37
3rd Board	AM-358	AM358B.IDV	8	20-27
2nd Board	AM-358	AM358B.IDV	4	10-17
1st Board	AM-358	AM358B.IDV	0	0-7

MAC515

= JUMPER INSTALLED

Figure 17

6.3 AM-3001 to AM-3000M External Cabling

The AM-3001 subsystem comes standard with an external 60-pin cable that connects the AM-3001 I/O bus to the AM-3000M computer. The diskette drive mounting kit includes a 34-pin external cable that connects a diskette drive in the AM-3001 to the AM-214 controller located in the AM-3000M computer. There is also an external SCSI cable available that connects the SCSI peripherals in the AM-3001 to the SCSI bus located in the AM-3000M computer.

All of these cables connect between the rear panels of the AM-3001 subsystem and the AM-3000M computer. Each cable is keyed, making it impossible to connect them incorrectly.

7.0 SOFTWARE CONSIDERATIONS

Information on creating drivers for peripheral devices supported by the AM-3001 subsystem is contained in the installation guides shipped with each device. The information includes termination, addressing, creating software drivers, and adding the devices to the system initialization command file.

There are two special serial I/O software drivers designed for the AM-3001 subsystem; **AM355B.IDV** is the driver that supports AM-355 boards; **AM358B.IDV** is the driver that supports AM-358 boards. Each of the serial I/O combinations in Figures 13 through 17 show the proper IDV and the correct OCTAL port numbering scheme for the AM-3001 subsystem.

For more information on serial I/O boards and adding new jobs to your system initialization command file, see the following documents:

- *AM-355 Serial I/O Board Installation Guide*
- *AM-358 Serial I/O Board Installation Guide*
- *System Operator's Guide to the System Initialization Command File*

APPENDIX A

TERMINATORS AND TERMINATION POWER

A.1 SCSI TERMINATION USING EXTERNAL TERMINATOR OPTION

The preferred method of terminating the SCSI bus in an AMOS based computer is the installation of an external terminator. In Early April of 1993, the external SCSI bus terminator became standard on all AMOS based computer configurations. Using an external terminator makes the task of installing an add-on subsystem (like a portable CD-ROM drive) easier, eliminating the necessity of removing terminators from a SCSI device located in the host computer.

External terminators are available from Alpha Micro under part number PRA-00222-00.

To use the external terminator, you need to insure none of your SCSI peripherals inside the computer are terminated. You will also need to follow the guidelines in the section on providing termination power for the SCSI bus.

If you have a 10 or 21-slot rack mount VME computer and want to install an external terminator, you will need to order a special adapter cable, DWB-10200-01. The adapter cable is required, because there is no external SCSI connector on these computers. The special cable has a connector that is compatible with the external terminator and would also allow easy access to your computer for a portable CD-ROM drive or other SCSI subsystem.

The external terminator is shown in Figure A-1:

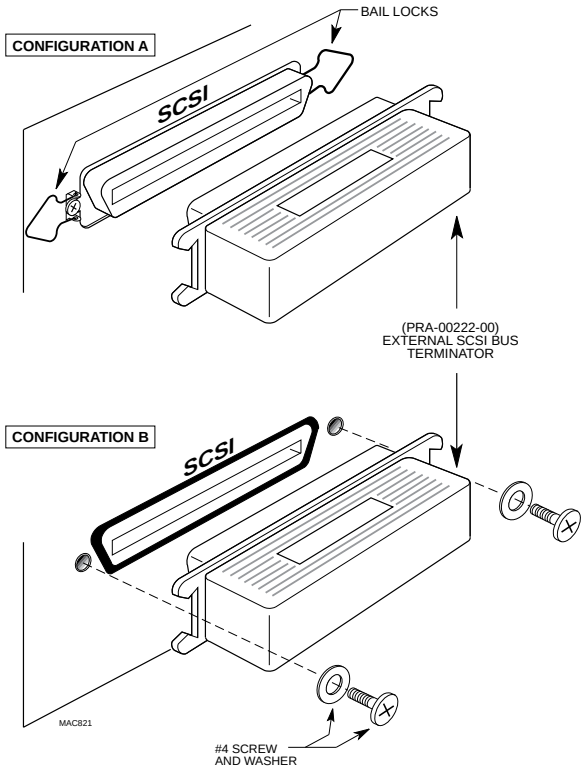

Figure A-1. External Terminator Installation

Figure A-1 shows two different types of external SCSI connectors.

1. Configuration "A" shows an extended external SCSI connector and bail locks for holding the terminator in place. This configuration is used on almost all of Alpha Micro's currently available product. The terminator is installed by sliding it over the connector and then latching the bail locks into the notches in the terminator.

2. Configuration "B" shows a flush mounted external SCSI connector. The only product Alpha Micro currently offers using a flush mounted external SCSI connector is the pedestal (also known as the "Classic") chassis. In this configuration, the terminator inserts into a cutout in the sheet metal and over the SCSI connector. The terminator is held in place with two #4 screws and washers.

A.1.1 Termination Procedure (Without External Terminator)

1. AM-14XX, AM-16XX, or pedestal computers with one SCSI hard disk drive can have that hard disk drive installed with its terminators removed.

2. If an AM-14XX, AM-16XX, or pedestal computer has more than one SCSI device, the last SCSI device, the device attached to the connector farthest down the cable away from the CPU board must be terminated.

3. If an AM-14XX, AM-16XX, or pedestal computer includes a SCSI magnetic tape drive as its only SCSI device, the tape drive must have its terminators installed.

4. For AM-990, 10-slot rack mount VME, and 21-slot rack mount VME computers, the last SCSI device attached to the connector farthest down the cable away from the CPU board must have its terminators installed. If only one SCSI device is installed, that device must be terminated.

5. For subsystem installations, the last SCSI device attached to the connector farthest down the cable away from the host computer must have its terminators installed.

AM-1000 and AM-1200 computers follow the same termination procedure used by AM-14XX, AM-16XX, and pedestal computers.

A.2 TERMINATOR POWER

In order to properly terminate the SCSI bus, one of the SCSI peripherals must be configured to supply termination power to the SCSI bus.

Use the following guidelines to determine which peripheral will be used to supply termination power for the SCSI bus:

1. Whenever possible, only one SCSI peripheral will be configured to supply termination power to the SCSI bus.

2. If a computer has more than one SCSI peripheral and at least one of those peripherals is a disk drive, one disk drive will be configured to supply termination power to the bus. The other disk or tape SCSI devices will be configured so they do not supply termination power.

3. If a computer does not have a SCSI disk drive, but does have one or more SCSI magnetic tape or CD-ROM drives, then one of these devices will be configured to supply termination power.

4. If a computer with one or more SCSI peripherals is cabled to a subsystem with additional SCSI devices, one SCSI device in the host computer would normally be configured to supply termination power for the bus.

   You should avoid having a SCSI device in both the host computer and the subsystem configured to supply termination power. Ideally, you want the source of the termination power for the bus to be supplied by **one power source**.

For information on how to configure terminator power, see the following documents:

- *SCSI Disk Drives Installation Instructions,* PDI-00436-20, revision A12 or later.
- *AM-625/626/627 SCSI 1/4" Streaming Tape Drive Installation Instructions*, PDI-00625-00, revision A05 or later.
- *AM-647 DAT Tape Drive Installation Instructions,* PDI-00647-00, revision A02 or later.